2 PART STAINLESS STEEL TABLE LIFT



Credit: Antoine Heusse

This motorized stainless steel system allows the automatic raising and lowering of the tabletop, both outdoors and indoors.

Scan here for more information!
www.noval-marine.com



Credit: Noval



Credit: Antoine Heusse

GENERAL DESCRIPTION

- This 316 stainless steel mirror-polished solution makes it possible to change a high table into a bed or a coffee table, for example.
- Outdoor environment compatible.
- Synchronisation possible between two table lifts (to be specified when ordering).
- Possible options:
  - remote control,
  - power supply,
  - switch,
  - control box.

Square built-in model

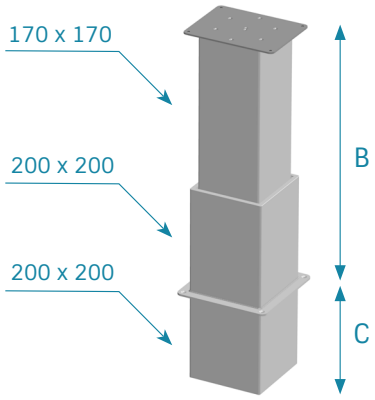

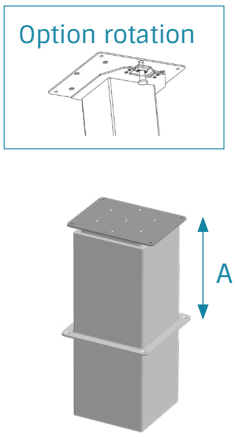

316 STAINLESS STEEL 2 PART SQUARE BUILT-IN MODELS

Reference	Finish	Dimensions								Speed		Load			Power supply		IP Grade
		Retracted height A (mm)	Deployed height B (mm)	Recessing height C (mm)	Stroke (mm)	Rotation option	Lower plate dimensions (mm)	Upper plate dimensions (mm)	Installation orientation	No load speed (mm/s)	Full load speed (mm/s)	Dynamic bending moment (Nm)	Static bending moment (Nm)	Compression load (N)	Voltage (V)	Max current (A)	
NL1910	Mirror-polished	300	700	255	400	NO	250 x 250	250 x 188	Standard	14	8	250	500	2000	12	10	IPX6
NL1911	Mirror-polished	300	700	255	400	NO	250 x 250	250 x 188	Standard	14	8	250	500	2000	24	5	IPX6
NL2171	Mirror-polished	350	690	145	340	NO	250 x 250	250 x 188	Standard	14	8	250	500	2000	12	10	IPX6
NL2172	Mirror-polished	350	690	145	340	NO	250 x 250	250 x 188	Standard	14	8	250	500	2000	24	5	IPX6
NL3432	Mirror-polished	440	840	115	400	NO	350 x 350	350 x 350	Standard	14	8	250	500	2000	12	10	IPX6
NL3433	Mirror-polished	440	840	115	400	NO	350 x 350	350 x 350	Standard	14	8	250	500	2000	24	5	IPX6

Square model

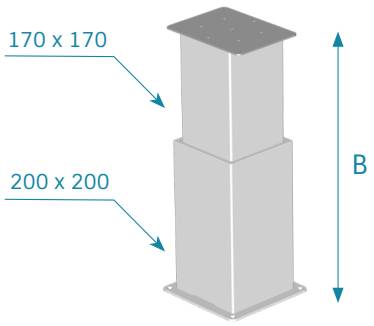

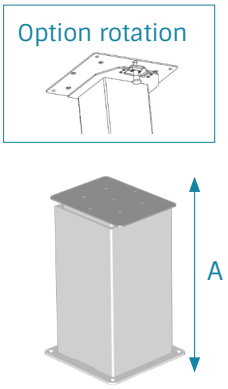

| 316 STAINLESS STEEL 2 PART SQUARE MODELS

Reference	Finish	Dimensions								Speed		Load			Power supply		IP Grade
		Retracted height A (mm)	Deployed height B (mm)	Recessing height C (mm)	Stroke (mm)	Rotation option	Lower plate dimensions (mm)	Upper plate dimensions (mm)	Installation orientation	No load speed (mm/s)	Full load speed (mm/s)	Dynamic bending moment (Nm)	Static bending moment (Nm)	Compression load (N)	Voltage (V)	Max current (A)	
NL2050	Mirror-polished	274	414	-	140	NO	250 x 250	250 x 188	Standard	14	8	250	500	2000	12	10	IPX6
NL2051	Mirror-polished	274	414	-	140	NO	250 x 250	250 x 188	Standard	14	8	250	500	2000	24	5	IPX6
NL0885	Mirror-polished	404	674	-	270	NO	250 x 250	250 x 188	Standard	14	8	250	500	2000	12	10	IPX6
NL0885-BL	Black (RAL9005 SATIN)	404	674	-	270	NO	250 x 250	250 x 188	Standard	14	8	250	500	2000	12	10	IPX6
NL0885-WH	White (RAL9016 SATIN)	404	674	-	270	NO	250 x 250	250 x 188	Standard	14	8	250	500	2000	12	10	IPX6
NL0885-BR	Brush	404	674	-	270	NO	250 x 250	250 x 188	Standard	14	8	250	500	2000	12	10	IPX6
NL0886	Mirror-polished	404	674	-	270	NO	250 x 250	250 x 188	Standard	14	8	250	500	2000	24	5	IPX6
NL0886-BL	Black (RAL9005 SATIN)	404	674	-	270	NO	250 x 250	250 x 188	Standard	14	8	250	500	2000	24	5	IPX6
NL1180	Mirror-polished	404	674	-	270	NO	400 x 400	250 x 188	Standard	14	8	250	500	2000	12	10	IPX6
NL1181	Mirror-polished	404	674	-	270	NO	400 x 400	250 x 188	Standard	14	8	250	500	2000	24	5	IPX6
NL1181-BR	Brush	404	674	-	270	NO	400 x 400	250 x 188	Standard	14	8	250	500	2000	24	5	IPX6
NL3427	Mirror-polished	404	674	-	270	NO	350 x 350	350 x 350	Standard	14	8	250	500	2000	12	10	IPX6
NL3428	Mirror-polished	404	674	-	270	NO	350 x 350	350 x 350	Standard	14	8	250	500	2000	24	5	IPX6
NL3316	Mirror-polished	404	674	-	270	NO	570 x 230	250 x 188	Standard	14	8	250	500	2000	12	10	IPX6
NL2746	Mirror-polished	404	674	-	270	NO	570 x 230	250 x 188	Standard	14	8	250	500	2000	24	5	IPX6
NL3576	Mirror-polished	445	715	-	270	YES	250 x 250	320 x 320	Standard	14	8	250	500	2000	12	10	IPX6
NL3577	Mirror-polished	445	715	-	270	YES	250 x 250	320 x 320	Standard	14	8	250	500	2000	24	5	IPX6

INSTALLATION EXAMPLES



Neel Trimaran - NEEL 65

Credit: Antoine Heusse



Fountaine Pajot - Alegria 67

Credit: Antoine Heusse



Fountaine Pajot - MY40

Credit: Antoine Heusse



Prestige Yacht - Prestige 590

Credit: Antoine Heusse