3 PART ANODISED ALUMINIUM TABLE LIFT



Credit: Noval

This motorized stainless steel system allows the automatic raising and lowering of the tabletop, both outdoors and indoors.

Scan here for more information!
www.noval-marine.com



Credit: Courtesy of Sea Water

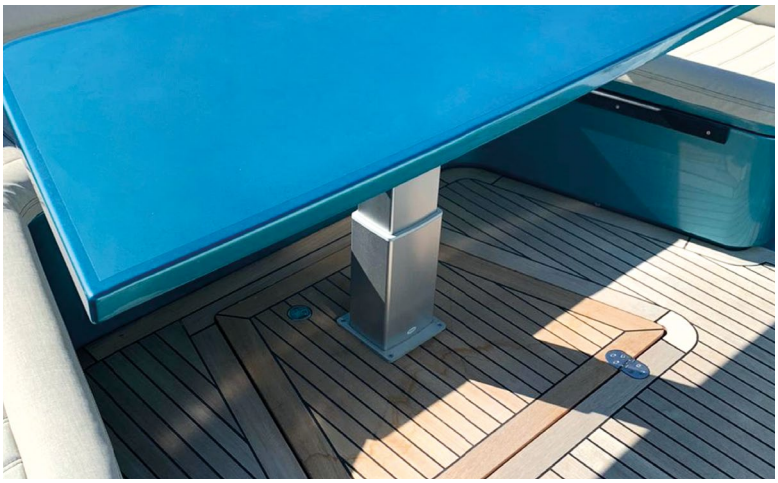

Credit: Courtesy of Sea Water

GENERAL DESCRIPTION AND DIMENSIONS

Rectangular model

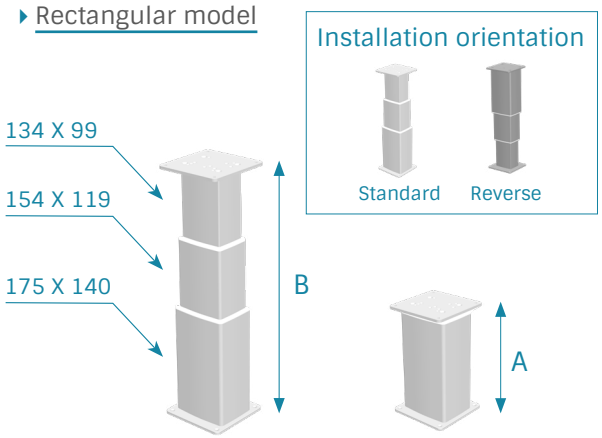

Square model

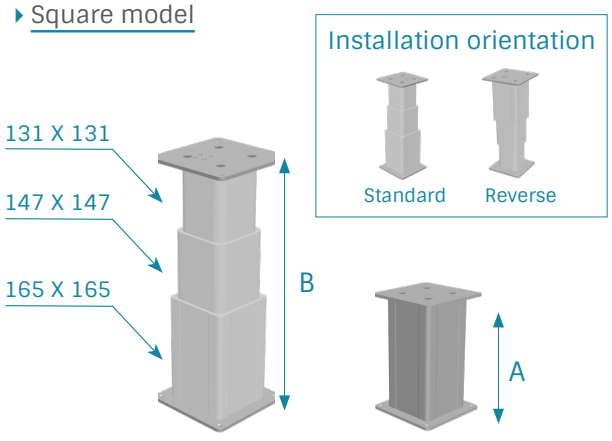

| ALUMINIUM 3 PART RECTANGULAR MODELS

Reference	Finish	Dimensions								Speed		Load			Power supply		IP Grade
		Retracted height A (mm)	Deployed height B (mm)	Recessing height C (mm)	Stroke (mm)	Rotation option	Lower plate dimensions (mm)	Upper plate dimensions (mm)	Installation orientation	No load speed (mm/s)	Full load speed (mm/s)	Dynamic bending moment (Nm)	Static bending moment (Nm)	Compression load (N)	Voltage (V)	Max current (A)	
NL2388	Grey anodized	358	758	-	400	NO	200 x 200	200 x 200	Standard	18	12	250	500	2000	12	10	IPX6
NL2389	Grey anodized	358	758	-	400	NO	200 x 200	200 x 200	Standard	18	12	250	500	2000	24	5	IPX6
NL3551	Grey anodized	320	644	-	324	NO	200 x 200	200 x 200	Standard	18	12	250	500	2000	12	10	IPX6
NL3552	Grey anodized	320	644	-	324	NO	200 x 200	200 x 200	Standard	18	12	250	500	2000	24	5	IPX6
NL3919	Grey anodized	358	758	-	400	NO	200 x 200	200 x 200	Reverse	18	12	250	500	2000	12	10	IPX6
NL3920	Grey anodized	358	758	-	400	NO	200 x 200	200 x 200	Reverse	18	12	250	500	2000	24	5	IPX6

| ALUMINIUM 3 PART SQUARE MODELS

Reference	Finish	Dimensions								Speed		Load			Power supply		IP Grade
		Retracted height A (mm)	Deployed height B (mm)	Recessing height C (mm)	Stroke (mm)	Rotation option	Lower plate dimensions (mm)	Upper plate dimensions (mm)	Installation orientation	No load speed (mm/s)	Full load speed (mm/s)	Dynamic bending moment (Nm)	Static bending moment (Nm)	Compression load (N)	Voltage (V)	Max current (A)	
NL4550	Black anodized	342	662	-	320	NO	225 x 225	225 x 225	Standard	30,5	18	500	1000	4000	24	11	IPX4
NL4551	Black anodized	354	690	-	336	NO	225 x 225	225 x 225	Reverse	30,5	18	500	1000	4000	24	11	IPX6
NL4552	Black anodized	332	700	-	368	NO	225 x 225	225 x 225	Reverse	30,5	18	500	1000	4000	24	11	IPX6

GENERAL DESCRIPTION AND DIMENSIONS

- Possible options:
  - remote control,
  - converter (DC/DC)
  - power supply
  - switch
  - control box
- Outdoor environment compatible.
- Finish anodised alumnium.
- Synchronozation possible between two table lifts (to be specified when ordering).

Cylindrical model

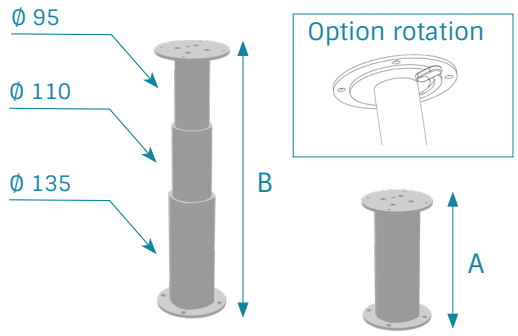

PAIRWISE INTEGRATION ONLY

ALUMINIUM 3 PART CYLINDRICAL STANDARD MODELS

Reference	Finish	Dimensions								Speed		Load			Power supply		IP Grade
		Retracted height A (mm)	Deployed height B (mm)	Recessing height C (mm)	Stroke (mm)	Rotation option	Lower plate dimensions (mm)	Upper plate dimensions (mm)	Installation orientation	No load speed (mm/s)	Full load speed (mm/s)	DDynamic bending moment (Nm)	Static bending moment (Nm)	Compression load (N)	Voltage (V)	Max current (A)	
NL4467	Black anodized	333	683	-	350	NO	Ø 200	Ø 200	Standard	16,5	9,6	500	1000	2000	24	5	IPX6
NL4575	Grey anodized	333	683	-	350	NO	Ø 200	Ø 200	Standard	16,5	9,6	500	1000	2000	24	5	IPX6
NL2407	Grey anodized	358	758	-	400	NO	Ø 200	Ø 200	Standard	16,5	9,6	500	1000	2000	12	10	IPX6
NL2408	Grey anodized	358	758	-	400	NO	Ø 200	Ø 200	Standard	16,5	9,6	500	1000	2000	24	5	IPX6
NL4122	Black anodized	358	758	-	400	NO	Ø 200	Ø 200	Standard	16,5	9,6	500	1000	2000	12	10	IPX6
NL4123	Black anodized	358	758	-	400	NO	Ø 200	Ø 200	Standard	16,5	9,6	500	1000	2000	24	5	IPX6
NL3505	Grey anodized	366	766	-	400	YES	Ø 200	Ø 270	Standard	16,5	9,6	500	1000	2000	12	10	IPX6
NL3506	Grey anodized	366	766	-	400	YES	Ø 200	Ø 270	Standard	16,5	9,6	500	1000	2000	24	5	IPX6
NL4411	Grey anodized	408	908	-	500	NO	Ø 200	Ø 200	Standard	16,5	9,6	500	1000	2000	24	5	IPX6

Cylindrical anti-rotation model

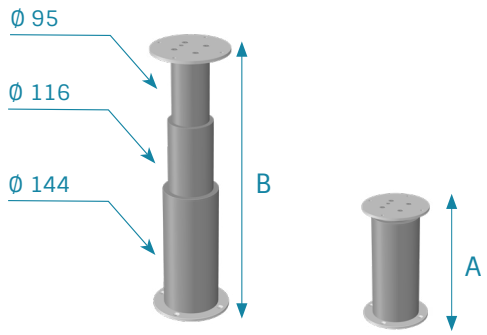

| ALUMINIUM 3 PART CYLINDRICAL ANTI-ROTATION MODELS

Reference	Finish	Dimensions								Speed		Load			Power supply		IP Grade
		Retracted height A (mm)	Deployed height B (mm)	Recessing height C (mm)	Stroke (mm)	Rotation option	Lower plate dimensions (mm)	Upper plate dimensions (mm)	Installation orientation	No load speed (mm/s)	Full load speed (mm/s)	Dynamic bending moment (Nm)	Static bending moment (Nm)	Compression load (N)	Voltage (V)	Max current (A)	
NL4400-12V-C360-BL	Black anodized	358	718	-	360	NO	Ø 200	Ø 200	Standard	16	8,5	500	1000	2000	12	12	IPX6
NL4400-24V-C360-BL	Black anodized	358	718	-	360	NO	Ø 200	Ø 200	Standard	16	8,5	500	1000	2000	24	6	IPX6
NL4400-12V-C360-GR	Grey anodized	358	718	-	360	NO	Ø 200	Ø 200	Standard	16	8,5	500	1000	2000	12	12	IPX6
NL4400-24V-C360-GR	Grey anodized	358	718	-	360	NO	Ø 200	Ø 200	Standard	16	8,5	500	1000	2000	24	6	IPX6

