ELECTRIC RETRACTABLE HIDDEN BAR



Credit: Antoine Heusse

Noval offers a range of retractable electric bars.

Scan here for more information!
www.noval-marine.com

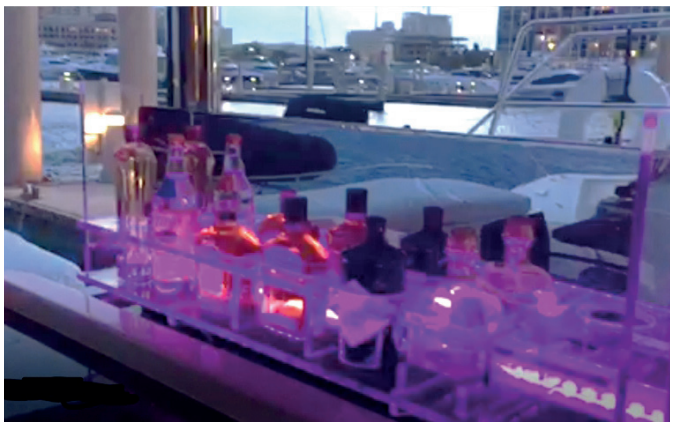

Credit: CNB



Credit: Antoine Heusse

GENERAL DESCRIPTION

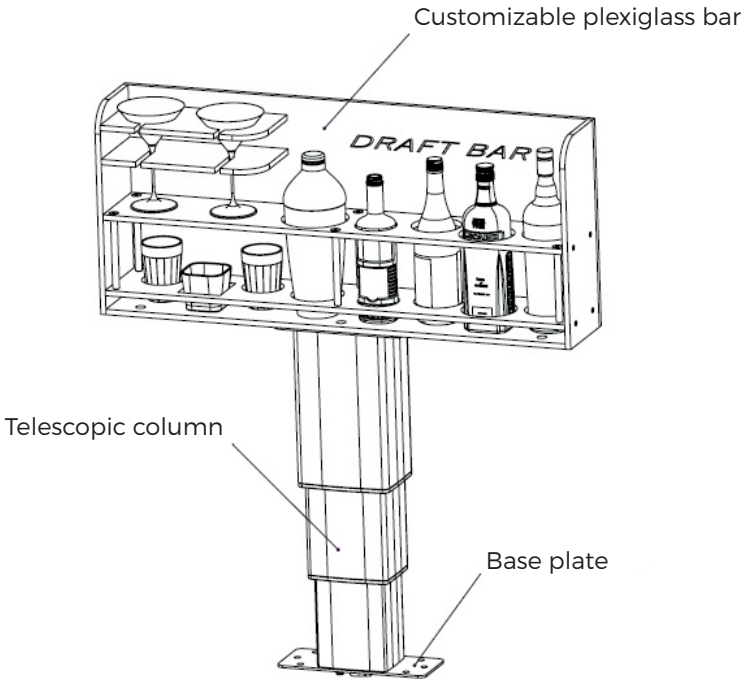

INSTALLATION EXAMPLE






Credit: Antoine Heusse